ARMATUREN

Operating and installation instructions

Safety valves SAFE

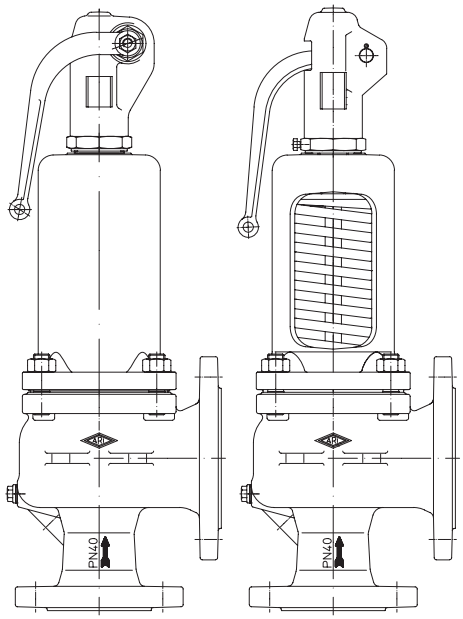

SAFE
(Series 900)

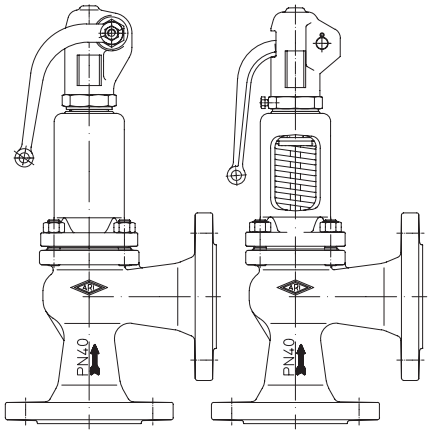

SAFE-P
(Series 920)

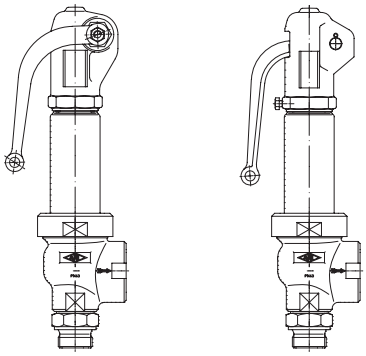

SAFE-TC
(Series 940)

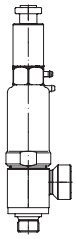

SAFE-TCP/TCS
(Series 960/950)

Contents

1.0 General information on operating instructions 2
2.0 Notes on possible dangers 2
2.1 Significance of symbols 2
2.2 Explanatory notes on safety information 2
3.0 Storage and transport 3
4.0 Description 3
4.1 Scope of applications 3
4.2 Operating principles 3
4.3 Diagram 4
4.3.1 Parts list 5
4.4 Technical data - remarks 6
4.5 Marking 7
5.0 Installation 8
5.1 General notes on installation 8
6.0 Putting the valve into operation 10
7.0 Care and maintenance 11
7.1 Setting instructions 11
7.1.1 Removing the cap 11
7.1.2 Changing the set pressure “without” spring change 12
7.1.3 Changing the set pressure “with” spring change 12
7.2 Representation 14
8.0 Troubleshooting 15
9.0 Troubleshooting table 15
10.0 Dismantling the valve or the top part 17
11.0 Warranty / Guarantee 17
12.0 EC declaration of conformity 18

Rev. 0040401000 1210 englisch

1.0 General information on operating instructions

These operating instructions provide information on mounting and maintaining the fittings. Please contact the supplier or the manufacturer in case of problems which cannot be solved by reference to the operating instructions.

They are binding on the transport, storage, installation, start-up, operation, maintenance and repair.

The notes and warnings must be observed and adhered to.

- Handling and all work must be carried out by expert personnel or all activities must be supervised and checked.

It is the owner's responsibility to define areas of responsibility and competence and to monitor the personnel.

- In addition, current regional safety requirements must be applied and observed when taking the fittings out of service as well as when maintaining and repairing them.

The manufacturer reserves the right to introduce technical modifications at any time.

These Operating Instructions comply with the requirements of EU Directives.

2.0 Notes on possible dangers

2.1 Significance of symbols

Warning of general danger.

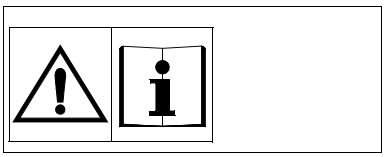

Non-compliance with operating instructions is dangerous! Read the operating instructions before installation, operation, maintenance or disassembly and adhere to them strictly.

2.2 Explanatory notes on safety information

In these Operating and Installation Instructions dangers, risks and items of safety information are highlighted to attract special attention.

Information marked with the above symbol and "***ATTENTION*** ! " describe practices, a failure to comply with which can result in serious injury or danger of death for users or third parties or in material damage to the system or the environment. It is vital to comply with these practices and to monitor compliance.

All other information not specifically emphasised such as transport, installation, operating and maintenance instructions as well as technical data (in the operating instructions, product documentation and on the device itself) must also be complied with to the fullest extent in order to avoid faults which in turn can cause serious injury to persons or damage to property.

3.0 Storage and transport

ATTENTION !

- Protect against external force (like impact, vibration, etc.).

- Valve mountings such as actuators, handwheels, hoods must not be used to take external forces, e.g. they are not designed for use as climbing aids, or as connecting points for lifting gear.

- Suitable materials handling and lifting equipment should be used. See catalog sheet for weights.

- At -20°C to +65°C.
- The paint is a base coat to protect against corrosion during transportation and storage. Do not damage paint protection.

4.0 Description

4.1 Scope of applications

Safety valves are used to protect pressurised systems.

ATTENTION !

- Refer to the data sheet for applications, limits on use and possibilities.

- Certain media require or preclude the use of special materials.

- The valves are designed for standard operating conditions. If conditions exceed these requirements, e.g. aggressive or abrasive media, the operator should state the higher requirements when ordering

- Valves made from grey cast iron are not authorised for use in systems subject to TRD 110.

- When media in Fluid Group 1 are used, seal exteriors must be designed so that they pose no danger to humans or the environment.

- Open safety valves (open bonnet / open cap) are not permissible for fluids, dusty atmospheres, open air use or for any Group 1 fluids in accordance with Pressure Equipment Directive 97/23/EC.

The information complies to the Pressure Equipment Directive 97/23/EC.
It is the responsibility of the machine planner to ensure compliance.
The special markings on the valve must be taken into account.

Refer to the catalogue sheet to see which materials are used in standard versions.

Please contact the supplier or the manufacturer if you have any questions.

4.2 Operating principles

Safety valves are safety devices designed to prevent the pressure in any pressurised system from exceeding the maximum permissible pressure by more than the permissible tolerance of, usually +10%.

4.3 Diagram

Fig. 901 Fig. 921 Fig. 941 Fig. 961

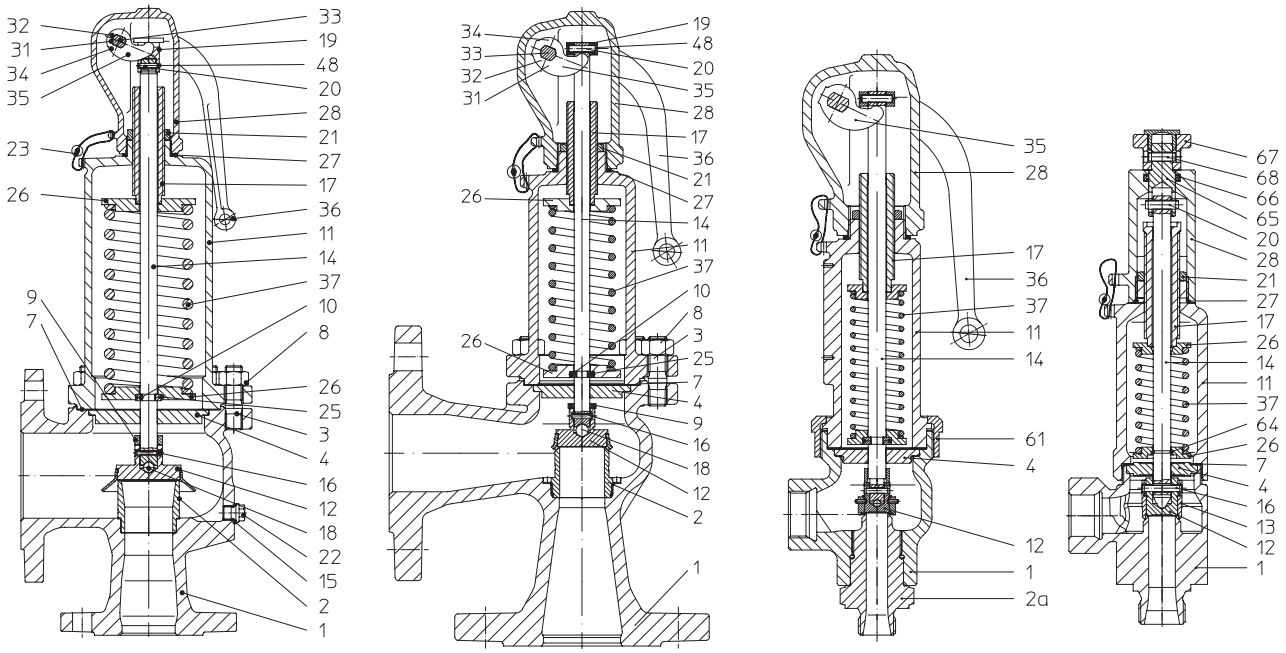

fig. 1

Fig. 902 / 912 / 903 / 904 / 922 / 924 / 945 / 946

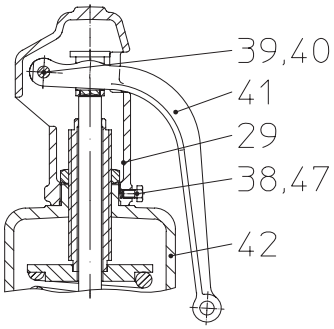

WEDI

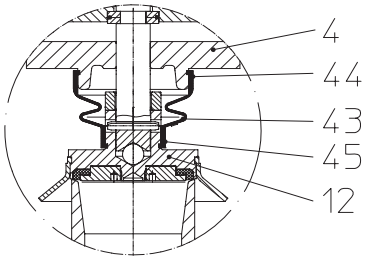

Bellow

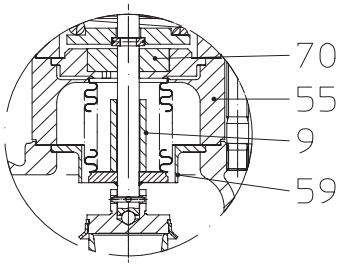

Lever
Fig. 951/952; 961/962

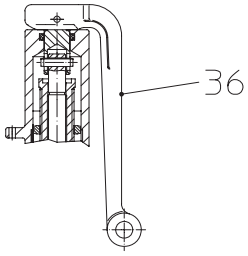

Disc series 950

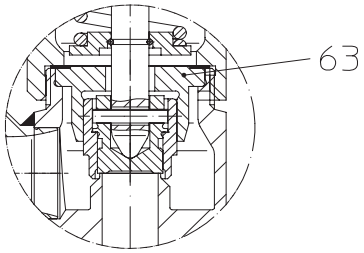

Bellow series 940

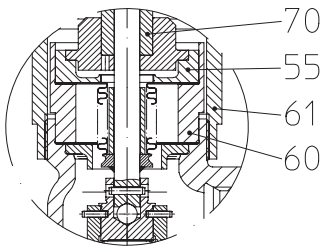

fig. 2

4.3.1 Parts list

Pos.	Description
1	Body
2	Seat (not changeable)
2	Screwed seat (SAFE-TC)
3	Stud
4	Spindle guide
7	Gasket
8	Hex. nut
9	Lift limitation ring
10	Spindle ring
11	Bonnet, closed
12	Disc unit
13	Lifting aid
14	Spindle
15	Gasket
16	Spring type straight pin
17	Adjusting screw
18	Ball
19	Spindle cap
20	Parallel pin
21	Lock nut
22	Hex. head screw
23	Lead seal
25	Snap ring
26	Spring plate
27	Gasket
28	Cap, closed
29	Cap open
31	Ring

Pos.	Description
32	Hex. nut
33	Lift bolt
34	Screw
35	Lift fork
36	Lifting lever
37	Spring
38	Screw
39	Bolt
40	Split pin
41	Lever open
42	Bonnet, open
43	Bellow
44	Ring
45	Ring
47	Ball
48	Retaining ring
55	Bellow unit
59	Protective rim
60	Spacer
61	Coupling
62	Weight
63	Guide bush
65	Coupling
66	O-Ring
67	Lift button
68	Spring type straight pin
70	Balanced piston

Refer to the data sheet for information about materials.

4.4 Technical data - remarks

for

- Principal dimensions

- **Pressure-temperature-ratings, etc.** refer to datasheet.

Series 900:	**DN 20/32 - DN 150/250, 1”x2“ - 6”x10”** **EN-JL1040, EN-JS1049, 1.0619+N, 1.4408, SA 216 WCB** **PN 16/16, PN 40/16, ANSI 150/150, ANSI 300/150**
Approval acc. to:	
Figure 901, 902, 911, 912	- DIN EN ISO 4126-1, VdTÜV leaflet 100, AD2000-A2 and TRD 421. Application letter D/G and F
	- ASME Code Section VIII-Division 1 (UV-Stamp)
Figure 903, 904, 990	-VdTÜV leaflet 100, -100/4, TRD 721, DIN EN 12828. Application letter D/G/H and D (for Figure 904, 990)
Series 920:	**DN 15 - DN 100** **EN-JL1040, 1.0619+N, 1.4408** **PN 16, PN 40**
Approval acc. to:	
Figure 921-924	- DIN EN ISO 4126-1, VdTÜV leaflet 100, AD2000-A2 and TRD 421. Application letter D/G and F
Series 940:	**DN 15 - DN 25 (G 1/2“ - G 1“)** **EN-JS1049, 1.4408** **PN 40**
Approval acc. to:	
Figure 941-943	- DIN EN ISO 4126-1, VdTÜV leaflet 100, AD2000-A2 and TRD 421. Application letter D/G and F
Figure 945-946	-VdTÜV leaflet 100, -100/4, TRD 721, DIN EN 12828. Application letter D/G/H and D
Series 950/960:	**DN 15 - DN 25 (G 1/2“ - G 1“)** **EN-JS1049, 1.4581** **PN 100**
Approval acc. to:	
Figure 951-953 Figure 961-963	- DIN EN ISO 4126-1, VdTÜV leaflet 100, AD2000-A2. Application letter D/G and F
Accessories:	Stainless steel bellow for back-pressure compensation; elastomer bellow; soft sealing disc; lock bush; proximity switch; heating jacket; test gag; rupture disc; support tongues; removable lifting aid

4.5 Marking

Safety valve (TÜV)

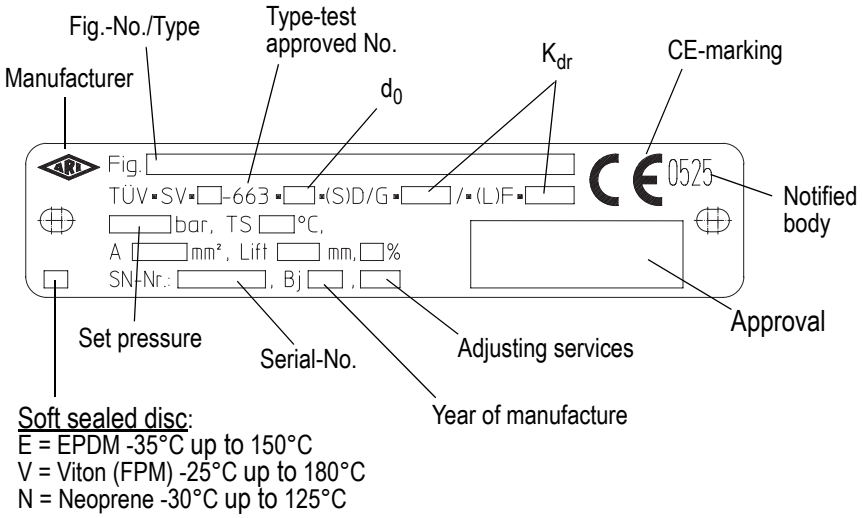

Soft sealed disc:
E = EPDM -35°C up to 150°C
V = Viton (FPM) -25°C up to 180°C
N = Neoprene -30°C up to 125°C

Safety valve (ASME)

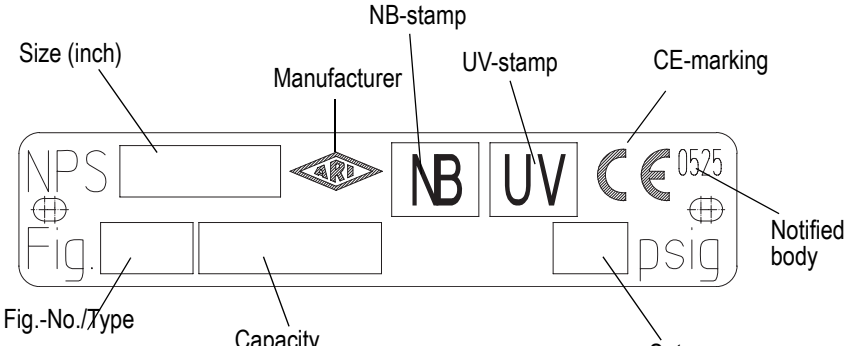

Units:
SCFM = air
lb/hr = steam
gal/min = water

Fig. 3:
Type test plates

Address of manufacturer: refer to item 11.0 Warranty / Guarantee

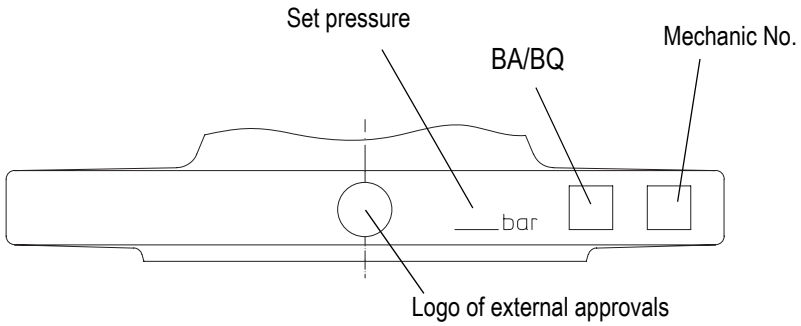

Fig. 4: Body (outlet)

Series with thread connections are marked on the body.

5.0 Installation

5.1 General notes on installation

The following points should be taken into account besides the general principles governing installation work:

ATTENTION !

- *Remove flange covers if present.*
- *The interior of valve and pipeline must be free from foreign particles*
- *Note installation position with reference to flow, see mark on valve.*
- *Steam line systems should be designed to prevent water accumulation*
- *Lay pipelines so that damaging transverse, bending and torsional forces are avoided.*
- *Protect valves from dirt during construction work.*
- *Connection flanges must mate exactly.*
- *Connecting bolts for pipe flanges should be mounted preferably from the counter flange side (hexagon nuts from the valve side).*
  At DN15-32: If valves should be mounted directly to valves, the upper flange connecting bolts should be preferably executed with studs and hexagon nuts on both sides.
- *Valve mountings such as actuators, handwheels, bonnets must not be used to take external forces, e.g. they are not designed for use as climbing aids, or as connecting points for lifting gear.*
- *Suitable materials handling and lifting equipment should be used.*
  See data sheet for weights.
- *The blow-off line shall be sufficiently large to ensure that the internal back-pressure while blowing-off does not exceed 10% (on reqest max. 15%) of the set pressure. (Exception: safety valves with metallic bellow for back-pressure compensation).*
- *If back pressure exceeds 10% (on request max. 15%) of set pressure, the safety valve must be fitted with a metallic bellow seal for back pressure compensation. The maximum back pressure must be specified by the manufacturer. If necessary a leak detector should be provided to monitor the back pressure compensating metallic bellow seal, but the leak detector must not block ventilation.*
- *The ventilation hole in the bonnet of safety valves with a metallic bellow seal must remain open as a matter of principle, although in the case of Group I fluids (PED 97/23/EC) a non-isolatable pipeline must be connected to remove the medium safely (without back pressure if the bellow seal is damaged. Ventilation must not be blocked by any leak detector used.*
- *No pipe sections or screws must protrude into the spring bonnet through the inspection connection. Blockage hazard!*
- *The drainage system shall be adequate to remove the condensate.*
- *Blockage of the drainage system by dirt or foreign bodies shall be avoided.*
- *Freezing, sticking or blocking of the safety valve must be avoided at all costs. If necessary use a heating jacket and/or stainless steel bellow with or without a rupture disk.*
- *Safety valves shall be installed with upright spindle, not series 950 when marked, “Einbau nur horizontal (Installation only horizontal)”, then they must be installed horizontally.*

- Flange gaskets shall be fitted concentrically and not restrict the flow cross section.
- Keep the shaft of the spindle-unit free from paint (open bonnet / cap).
- Blow-off lines shall be laid with gradient.
- The ratio pao/po shall be taken into account when dimensioning the system.
- Safety valves shall be equipped with support tongues to absorb high reaction forces.
- Pressure losses in the line to the safety valve shall not exceed 3%.
- Ensure that adequate drip pans are used if setting media in Fluid Group pursuant to PED 97/23/EC.

- Planners / construction companies or operators are responsible for positioning and installing products.
- The valves are designed for application, not influenced from weather.
- For application outside or in adverse environments like corrosion-promoting conditions (sea water, chemical vapours, etc.), special constructions or protective measures are recommended.
- Refer to appropriate TRD 421, AD2000-A2, DIN, ASME Code rules for piping and installation.
- Remove transport fasteners and protective caps for inlet and outlet immediately before installation.
- Water shall be drained from the safety valve and blow-off line via the blow-off line (drainage points always at the lowest point).

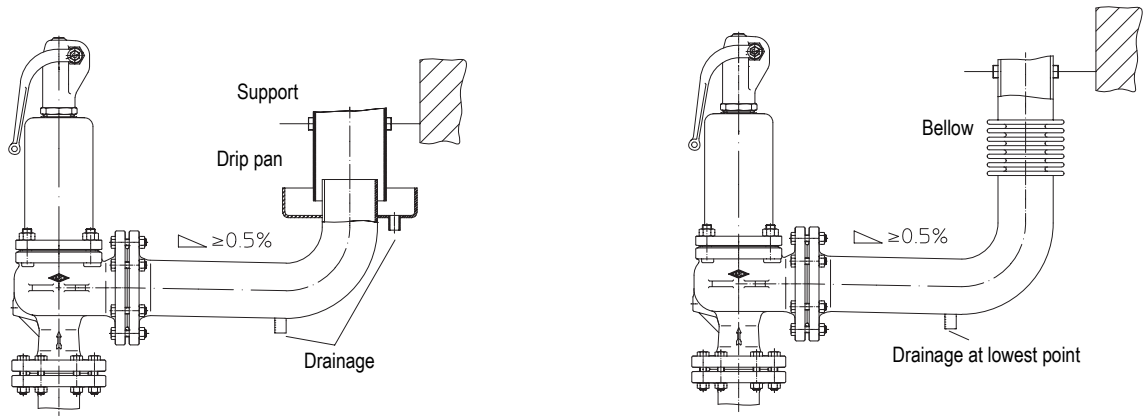

fig. 5

6.0 Putting the valve into operation

ATTENTION !

- Before putting the valve into operation, check material, pressure, temperature and direction of flow.

- Regional safety instructions must be adhered to.

- Residues in piping and valves (dirt, weld beads, etc.) inevitably lead to leakage.

- Touching the valve when it is operating at high (> 50°C) or low (< 0°C) media temperatures can cause injury.
Affix warning notice or protective insulation as appropriate!

- Before putting the valve into operation, check material, pressure, temperature, direction of flow and also check that the data of the valve are correct for the plant
(refer to type test plate)

- Remove any test gag from cap and close opening with stopper.

- Remove protective caps and lever lock before putting the valve into operation

- Freezing, sticking or blocking of the safety valve must be avoided at all costs. If necessary use a heating jacket and/or stainless steel bellow without a rupture disk. (Note point 5 “Installation”).

- When operating without a blow-off line, medium may spurt from the valve outlet. Injury hazard!

- Blowing off may generate loud flow noise.

- Medium may be discharged from the ventilation or inspection hole in the spring bonnet (safety valves with stainless steel bellows and heating valves)
Injury hazard!

- Hot vapour may be discharged if the spring bonnet is open.

Before putting a new plant into operation or restarting a plant after repairs or modification, always make sure that:

- All works has been completed!

- The valve is in the correct position for its function.

- Safety devices have been attached.

7.0 Care and maintenance

Maintenance and maintenance-intervals have to be defined by the operator according to the requirements.

ATTENTION !

- Too frequent lifting for test purposes can increase wear of the sealing surfaces!

- The safety valve must be lifted from time to time in line with current regulations (by ≥ 85% from the set pressure) to ensure that the valve works correctly. (The intervals at which this must be done depends on various factors so that no generally applicable interval can be specified)

- Original parts only should be fitted as spares as a matter of policy.

- In safety valves with an open spring bonnet there is a danger of being crushed between the spring windings during lifting and setting.

- Lift the safety valve stem briefly (releasing the lever suddenly) to eliminate slight leaks due to particles between the seat and disc.
- If this does not eliminate the leak, the sealing surfaces of the seat and/or disc have been damaged.
  This can only be rectified at our works or by an authorised contractor.
- With valves corresponding to Figures 901, 921 and 941, the lever must always be returned to the original position after lifting the safety valve.
- With Fig. 951 and 961 the lift button must be pressed down again after lifting.
- The manufacturer accepts guarantee liabilities only if tampering by third parties is prevented.

7.1 Setting instructions

ATTENTION !

The following work must only be carried out by authorised specialist workshops or at the operator's own responsibility with monitoring by an independent agency (e.g. TÜV).

7.1.1 Removing the cap

ATTENTION !

If there is back pressure or during setting/lifting, medium may be discharged from the open bonnet, or into the adjusting screw area if the bonnet is closed.

ATTENTION !

When changing to the cap without lifting device (series 911, 923, 943), the spindel cap (pos. 19) must be removed.

Open caps

- Remove slit pin (pos. 40), bolt (pos. 39).
- Extract lifting lever (pos. 41).
- Remove screw (pos. 38).
- Unscrew cap (pos. 29).

Closed caps

- Press lifting lever (pos. 36) towards bonnet (pos. 11) and against stop.
- Unscrew cap (pos. 28).

Closed cap series 960/950

- Remove spring type straight pin (pos. 68)
- Remove lift button (pos. 67) or lifting lever (pos. 36)
- Unscrew cap (pos. 28)

7.1.2 Changing the set pressure “without” spring change

ATTENTION !

- When changing the set pressure in a pressurised system bear in mind vapour discharge if bonnet is open, in adjusting screw area if bonnet is closed.

- Note spring setting range.

- Check the spring range.
- Spindle (pos. 14) must be held fast by all alterations.
- Loosen lock nut (pos. 21).
- Turn adjusting screw (pos. 17) clockwise to increase and anticlockwise to reduce the set pressure.
- Secure spring setting by tightening lock nut (pos. 21).
- Assemble lifting device.

7.1.3 Changing the set pressure “with” spring change

ATTENTION !

- Depressurise the system before dismantling or opening the safety valve.

- For removing the cap refer to 7.1.1.
- Extract parallel pin (pos. 20) and lift off the spindle cap (pos. 19).
- Slacken locknut (pos. 21) and relieve spring (pos. 37) by turning adjusting screw (pos. 17) anticlockwise.
- Unscrew nuts (pos. 8) at flange connection and remove bonnet (pos. 11/42).
  Fig. 940: loosen coupling (pos. 61)
  Fig. 950/960: loosen bonnet (pos. 11)

ATTENTION !

- With higher set pressures, the two nuts (pos. 8) on the longer studs (pos. 3) must be removed last and simultaneously!

- Remove top spring-plate (pos. 26) and spring (pos. 37).
- Extract spindle (pos. 14) with disc (pos. 12/12a), guide plate (pos. 4/4a) and bottom spring-plate (pos. 26).
- Clean seat (pos. 2) and disc (pos. 12).
- Insert spindle (pos. 14) with disc (pos. 12), guide plate (pos. 4), spring-plate (pos. 26) and different spring (pos. 37).

- when carrying out any adjustment work hold the spindle (pos. 14) firm to prevent it twisting.

ATTENTION !

- Torques must be observed:

M10	16-25 Nm		screw joint BR940	100 Nm
M12	30-40 Nm		screwed seat BR940	180 Nm
M16	70-90 Nm		bonnet BR950/960	60 Nm
M20	150-175 Nm			

- Check spring marking in accordance with manufacturer's data.
- Note spring setting range.

- Change seals.
- Fit bonnet (pos. 11/42) and reset the set pressure; make sure spring setting range is appropriate.
- Secure spring setting by means of lock nut (pos. 21).
- Assemble lifting device.
- If necessary, replace both spring plates (pos. 26) and use longer studs (pos. 3) when fitting a spring for a higher set pressure.
- Further information obtainable from the manufacturer.

Only for series 900

ATTENTION !

When changing the set pressure and fitting a new spring, note that safety valves with set pressures between 0.2 and 1.5 bar have a greater lift.
Therefore:

Set pressure in the range	Spring change only in the range
0.2 to 1.5 bar	0.2 to 1.5 bar
> 1.5 bar	> 1.5 bar

Only for series 950:

ATTENTION !

Safety valves for horizontal application, must also to be set in a horizontal position *(≤ 4.9 bar).*

7.2 Representation

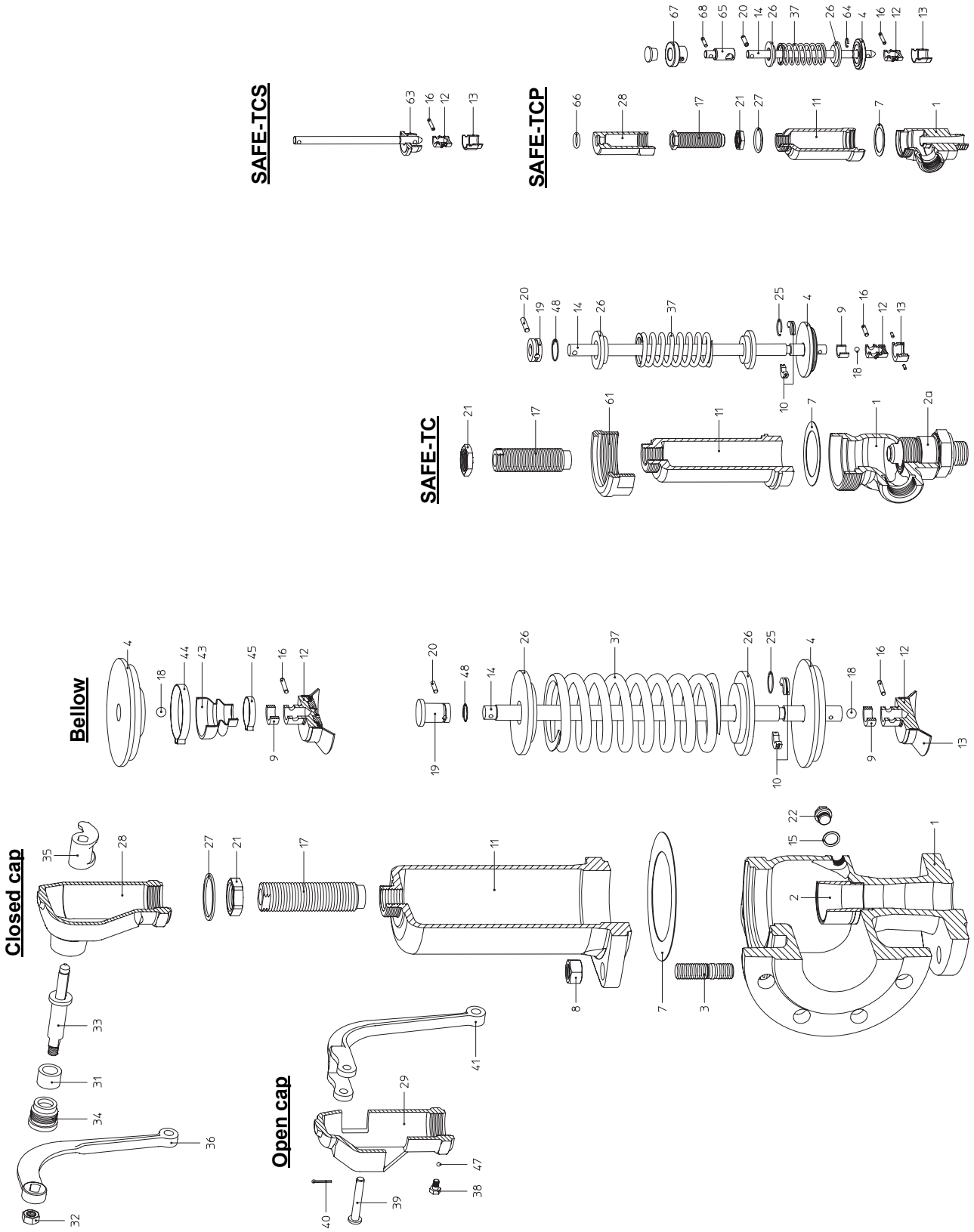

fig. 6

8.0 Troubleshooting

In the event of malfunction or faulty operating performance check that the installation and adjustment work has been carried out and completed in accordance with these Operating Instructions.

ATTENTION !

It is essential that the safety regulations are observed when identifying faults.

If malfunctions cannot be eliminate with the help of the following table "**9.0 troubleshooting table**", the supplier or manufacturer should be consulted.

9.0 Troubleshooting table

ATTENTION !

- read point 10.0 and 11.0 prior to dismantling and repair work!
- read point 6.0 before restarting the plant !

Fault	Possible cause	Corrective measures
Safety valve does not respond, no flow	Flange covers not removed.	Remove flange covers.
	Test gag still in place.	Remove test gag.
	Spring blocked.	Remove pipe or screw projecting into bonnet through inspection connection.
	Set pressure too high.	Reset (point 8.1) or replace the safety valve.
	Stainless steel bellow defective, no back-pressure compensation.	Replace the safety valve.
	Back-pressure not taken into account.	Reset (point 8.1) or, if necessary, replace the safety valve. The use of a stainless steel bellow to compensate for back-pressure should be considered.
	Medium viscous or sticky	Use bellow / heating jacket. Insert rupture disc upstream if necessary.
	The valves and piping must be protected against freezing and solidifying media.	Heating !
Stem cannot be lifted.	Pressure less than 85% of set pressure.	It must be possible to lift the spindle at over 85% of the set pressure.
Safety valve seat leaking.	Working pressure higher than 90% of set pressure.	Working pressure must be less than 90% of the set pressure.
	At low pressures: lever not in neutral position with closed cap.	Press lever into neutral position (towards bonnet).
	Safety valve flattering.	Refer to separate point "Flattering".
	Medium contaminated; foreign body between seat and disc.	Raise spindle briefly or, if necessary, replace safety valve. Use of a soft sealing disc should be considered.

Fault	Possible cause	Corrective measures
Flange broken.	Damage during transport.	Replace safety valve.
	Flange bolts not evenly tightened.	Replace safety valve.
	Transfer of forces such as bending or torsional forces.	Install free of tension.
Pressure surges.	Safety valve not installed at highest point.	Install safety valve at highest point.
	Valve drainage inadequate or not fitted.	Install drainage system a required by regulations.
Valve constantly blows off.	Transport fastening not removed.	Remove transport fastening (red screw above cap, Figure 990).
	Spring corroded by medium and broken.	Replace safety valve. In the case of vapour, select open cap or bonnet if possible.
Injury owing to medium.	Danger of injury from medium (e.g. liquids) emerging from valve.	Replace safety valve. Select design with closed bonnet and cap. Install a guard if necessary.
	Injury from vapour discharge (open bonnet / cap)	Install a guard if necessary
Flattering.	Pressure loss >3% in line to valve.	Reduce resistance by chamfering or radius in connection socket. Select larger line if necessary.
	Poor welding (root pass), gaskets at inlet and outlet flanges too small or not concentric.	Change conditions.
	Safety valve capacity too high.	Install smaller safety valve.
	Burner capacity too low.	Install smaller safety valve.
	Blow-off line too long or diameter too small.	Use larger diameter or back-pressure compensation by stainless steel bellow.
	Inlet and/or outlet socket too small.	Install with dimensions larger than DN of inlet and outlet lines.
	Back-pressure higher than 10%.	Install stainless steel bellow for pressure compensation.
Capacity too low.	Safety valves not applied unsuitable for plant conditions.	Select and install suitable safety valves.
	Safety valve not applied in line with current DIN, AD, TRD, etc. rules.	Adjust conditions.

10.0 Dismantling the valve or the top part

ATTENTION !

The following points must be observed:

- *Pressureless pipe system.*
- *Medium must be cool.*
- *Plant must be drained.*
- *Purge piping systems in case of caustic, inflammable, aggressive or toxic media.*

11.0 Warranty / Guarantee

The extent and period of warranty cover are specified in the "Standard Terms and Conditions of Albert Richter GmbH & Co. KG“ valid at the time of delivery or, by way of departure, in the contract of sale itself.

We guarantee freedom of faults in compliance with state-of-the-art technology and the confirmed application.

No warranty claims can be made for any damage caused as the result of incorrect handling or disregard of operating and installation instructions, datasheets and relavant regulations.

This warranty also does not cover any damage which occurs during operation under conditions deviating from those laid down by specifications or other agreements.

Justified complaints will be eliminated by repair carried out by us or by a specialist appointed by us.

No claims will be accepted beyond the scope of this warranty. The right to replacement delivery is excluded.

The warranty shall not cover maintenance work, installation of external parts, design modifications or natural wear.

Any damage incurred during transport should not be reported to us but *rather* to the competent cargo-handling depot, the railway company or carrier company immediately or else claims for replacements from these companies will be invalidated.

The manufacturer will accept warranty liability only if there has been no third party tampering.

Technology for the Future.

GERMAN QUALITY VALVES

ARI-Armaturen Albert Richter GmbH & Co. KG, D-33756 Schloß Holte-Stukenbrock
Telephone (+49 5207) 994-0 Telefax (+49 5207) 994-158 or 159
Internet: http://www.ari-armaturen.com E-mail: info.vertrieb@ari-armaturen.com

12.0 EC declaration of conformity

ARI-Armaturen Albert Richter GmbH & Co. KG,
Mergelheide 56-60, D-33756 Schloß Holte-Stukenbrock

EC declaration of conformity

as defined by
the Pressure Equipment Directive 97/23/EC

Herewith we declare,

that according to the above mentioned Pressure Equipment Directive (PED) the below listed products comply and have been approved according to Module H1 and also EC type test according to module B+D through Lloyd´s Register Quality Assurance GmbH (BS-No. 0525), Am Sandtorkai 41, D-20457 Hamburg.

Certificate-No: 50003/2

Safety valves
SAFE series 900
Type 901,911,912,902,903,904,990

Applied standards :
DIN EN ISO 4126-1
AD 2000 Code of Practice A2
AD 2000 Code of Practice A4
- Cast iron with spher. graphite
- Cast steel

TRD 421, TRD 721
VdTÜV 100, DIN 3840
ASME Code Section VIII-Div. 1

Safety valves
SAFE-P series 920
Type 921,922,923,924

Applied standards :
DIN EN ISO 4126-1
AD 2000 Code of Practice A2
AD 2000 Code of Practice A4
- Cast steel

TRD 421, TRD 721
VdTÜV 100, DIN 3840

Safety valves
SAFE-TC series 940
Type 941,942,943,945,946

Applied standards :
DIN EN ISO 4126-1
AD 2000 Code of Practice A2
AD 2000 Code of Practice A4
- Cast iron with spher. graphite
- Cast steel

TRD 421, TRD 721
VdTÜV 100, DIN 3840

Safety valves
SAFE-TCP/TCS series 950/960
Type 951,952,953,961,962,963

Applied standards :
DIN EN ISO 4126-1
AD 2000 Code of Practice A2
AD 2000 Code of Practice A4
- Cast iron with spher. graphite
- Cast steel

VdTÜV 100, DIN 3840

Schloß Holte-Stukenbrock, 11.01.2010

.....
(Brechmann, Managing director)